SECTION R5:
ROCK GUARD INSTALL

PARTS INCLUDED:

- 2X ROCK GUARDS
- 16X ROCK GUARD SPACERS
- 16X BHS-0.250-20-0.500 (1/4"-20 X 0.750" BUTTON HEAD SCREW)
- 16X RN-0.250-20 (1/4"-20 RIVNUT)

TOOLS REQUIRED:

- HEX WRENCH
- 1/4" DRILL BIT
- 25/64" DRILL BIT
- RIVNUT PULLER
- TAPE

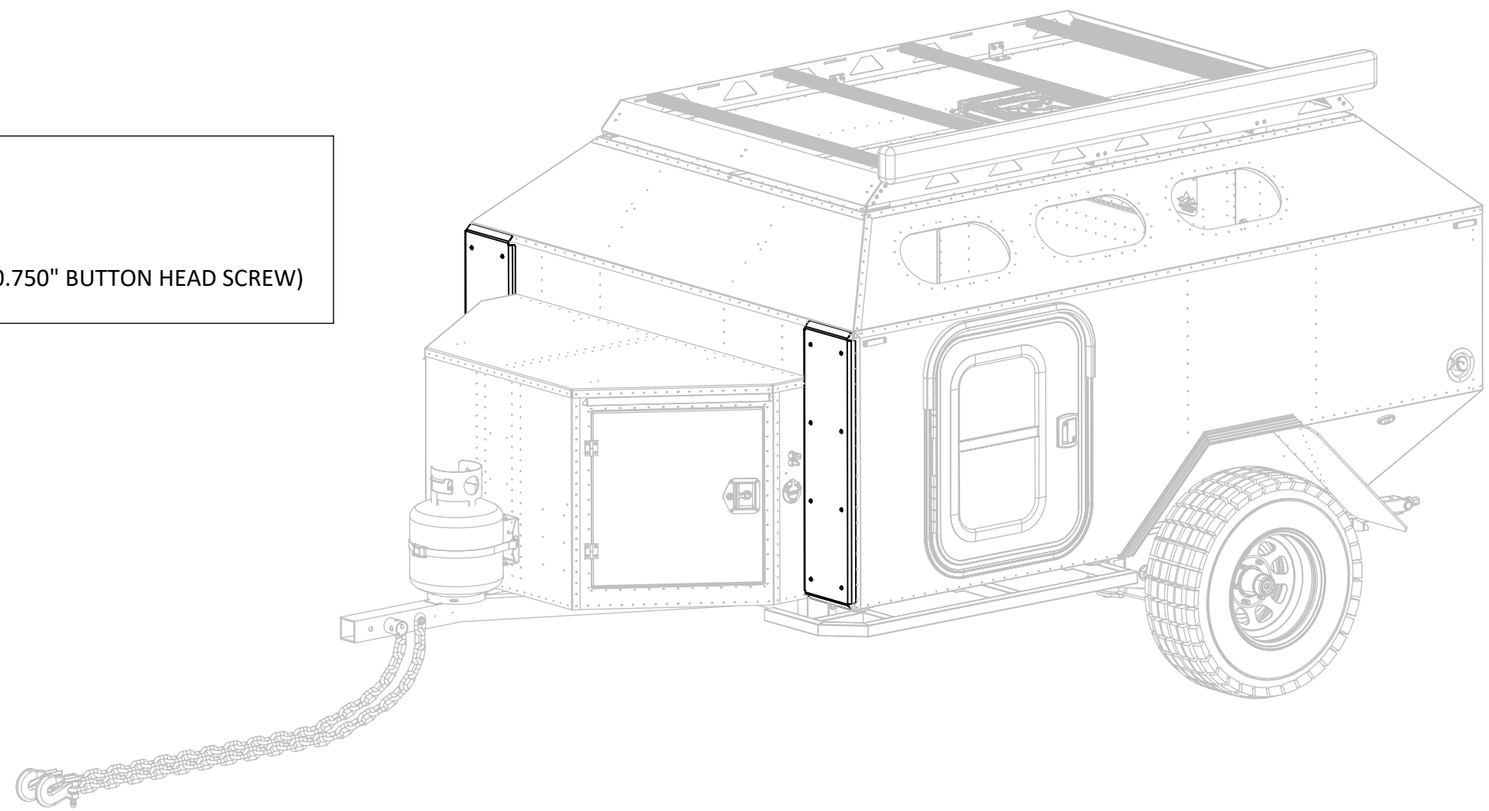

Step 1:
-MOUNT and TAPE rock guard against wall as drill template

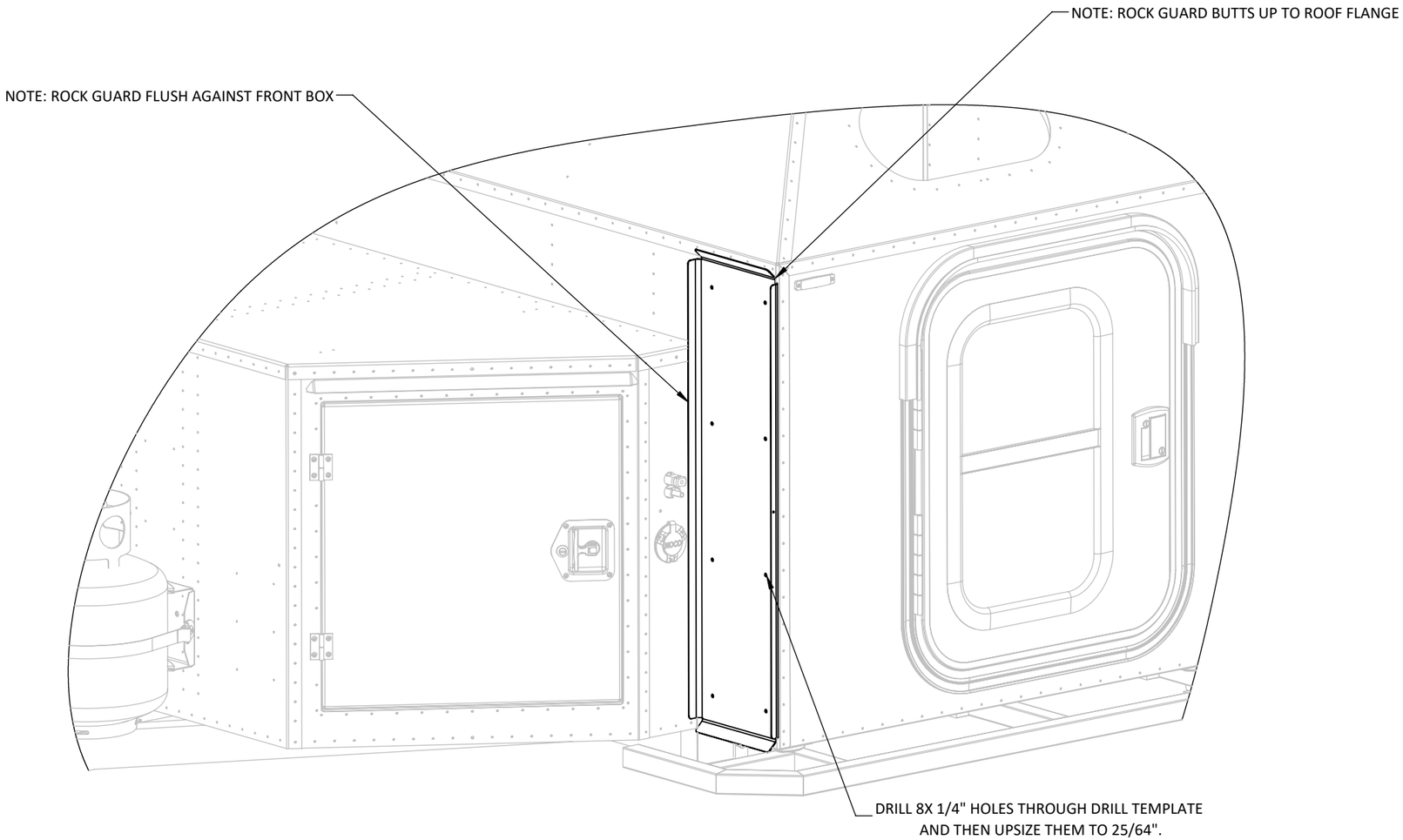

Step 2:
NOTE: BE CARFUL OF WIRES IN THE WALLS
-MATCH DRILL 1/4" holes through rock guard, then remove rock guard and UPSIZE the holes to 25/64".

Step 1:
-INSTALL rivnuts

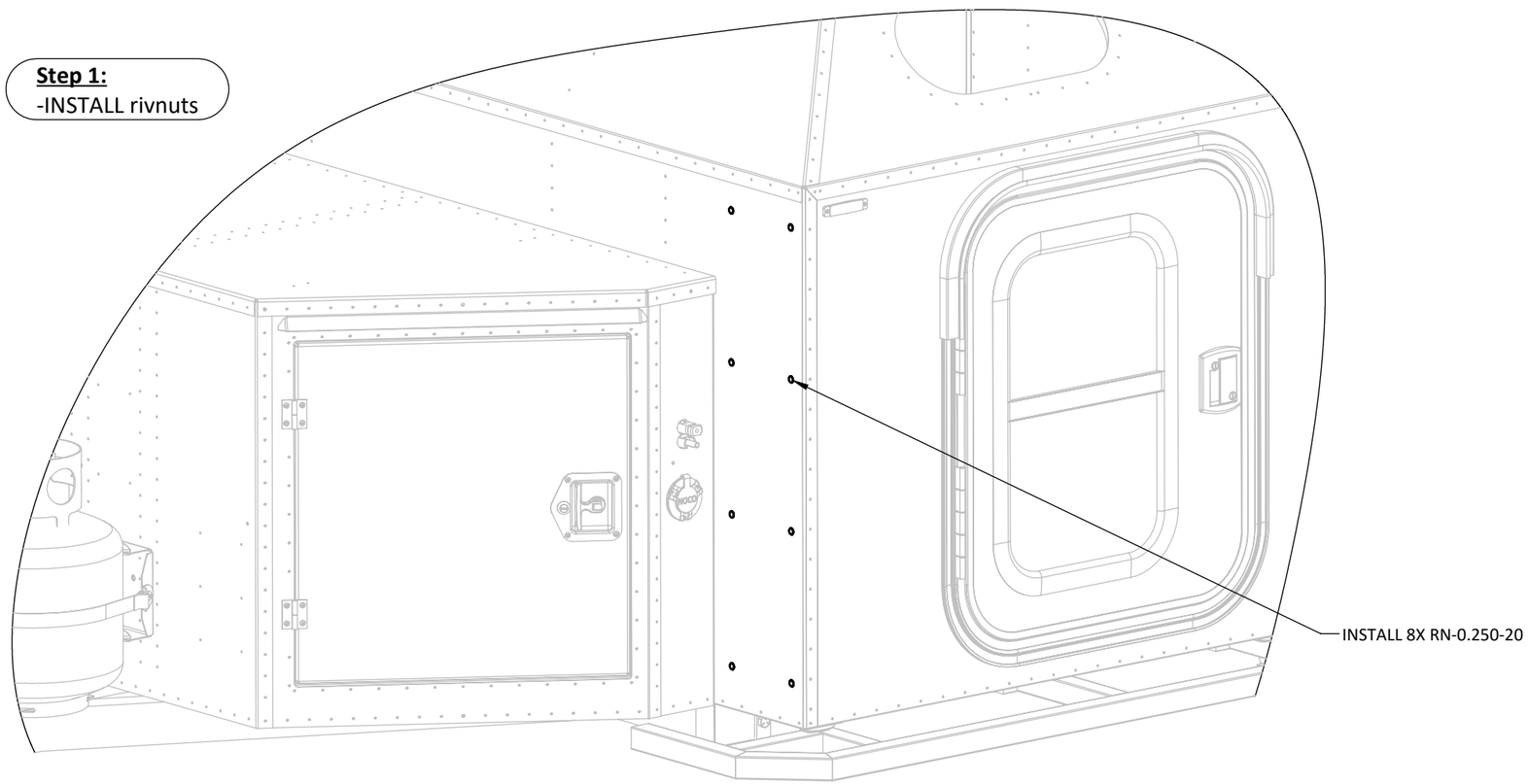

Step 1:
-INSTALL components as shown

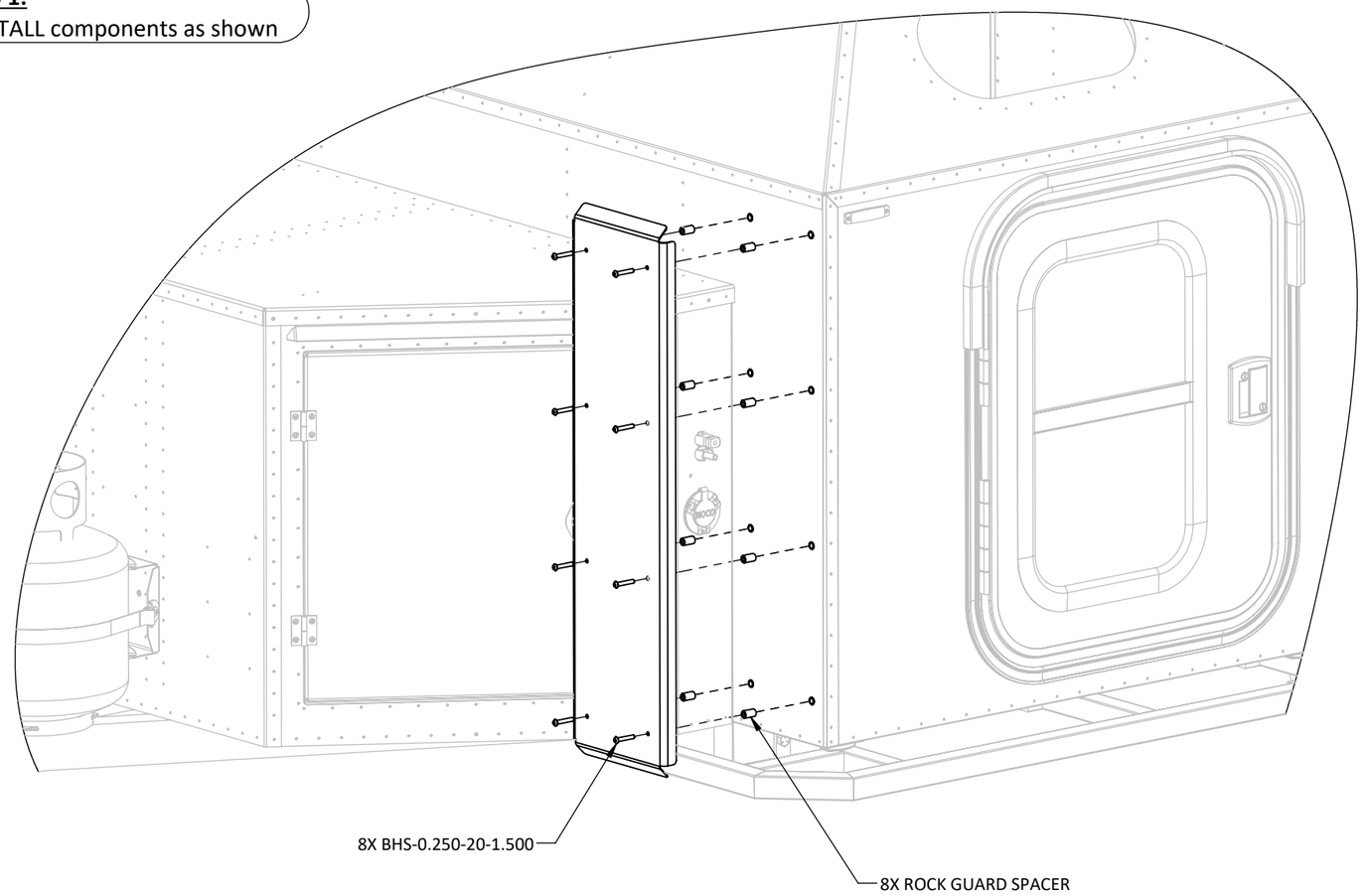

Step 2:
-REPEAT previous steps for other side of trailer